Two Horse Fire Complex
Emergency Fire Rehabilitation Plan
and
Environmental Assessment
OR-054-00-142

INTRODUCTION

The Two Horse Fire Complex consist of two fires (N340 and N352) which burned in the northern part of the Prineville District. (Refer to the attached Map). This Emergency Fire Rehabilitation Plan (EFR) Plan and EA will address N340 that burned approximately 8,400 acres of public land and 3,600 acres of private for a total of 12,000 acres. The fire included a large portion of the Spring Basin Wilderness Study Area (WSA) and two grazing allotments. The Spring Basin Allotment (2536) was the primary one with 9,740 acres of public land burned, Amine Peak Allotment (2633) with 160 acres, and 2,100 acres of public land not leased for grazing. N340 started on July 18, 2000, by lightning and was controlled on July 28, 2000.

I. PURPOSE AND NEED

The fire occurred in a Juniper/Wyoming big sagebrush/bunchgrass vegetation community. Approximately 70 percent of the public land acres burned are in mid to late seral condition and about 30 percent are in early seral condition and mainly dominated by cheatgrass with areas of medusahead rye (*Taeniatherum caput-medusae*). The purpose of the proposed action is to regain vigor of the existing native bunchgrasses and re-establish desirable perennial species on the sites dominated by annual vegetation in order to retard the invasion of noxious weed species. By establishing perennial grasses to create as much cover and soil stabilizing vegetation as possible, the amount of water-caused soil erosion would be reduced. The proposed treatments would facilitate moving the system toward a mid or late seral condition. The establishment of desirable vegetation would also improve the structure and diversity of the vegetation in the system. The proposed action would potentially enhance forage and browse for wildlife species and decrease the intensity and frequency of future wildfires. In addition, the allotment boundary fences, damaged by the fire, need reconstruction to protect the burn area from livestock grazing for the recovery of existing native, perennial vegetation and the establishment of the proposed seeded species.

II. Relationship to Planning

The proposed action is consistent with the current land use plan is the Two Rivers Resource Management Plan and Record of Decision, dated June 1986, and the Interim Management Policy for Lands Under Wilderness Review (IMP), BLM Manual H-8550-1, dated July 1995. In addition, the portion of the proposed action within the Spring Basin WSA was described in the Oregon Wilderness Environmental Impact Statement (Final), Volume II, dated December 1989. The WSA was further described in the Wilderness Study Report, Volume I, dated October 1991.

III. DESCRIPTION OF PROPOSED ACTION AND ALTERNATIVES

A. Proposed Action

1. Seeding

Approximately 600 acres inside the Spring Basin WSA would be seeded by aerial application during the winter of 2000/2001 using the seed and application rates listed in Table A. The 150 acres identified for herbicide application would be seeded in the fall of 2001. Approximately 100 acres outside the WSA would be aerially seeded this winter using the seed mix and application rates in Table B. (Refer to the attached map showing seeding locations).

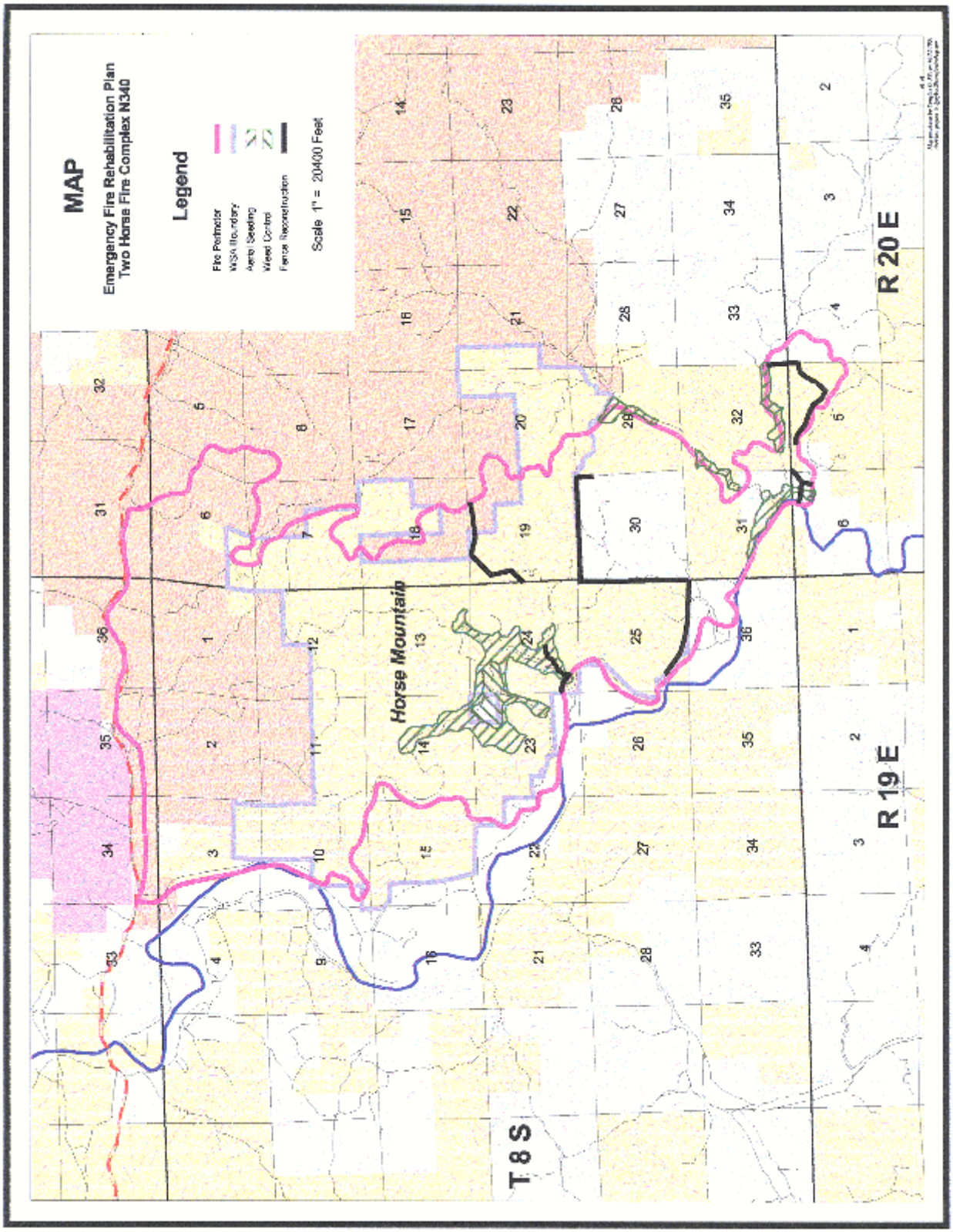
MAP
Emergency Fire Rehabilitation Plan
Two Horse Fire Complex N340
Legend
Fire Perimeter
WSA Boundary
Aerial Seeding
Weed Control
Fence Reconstruction
Scale 1" = 20400 Feet
Horse Mountain
T 8 S
R 19 E
R 20 E

Table A
Spring Basin WSA

Species	**Upland Mix (lbs/acre)**
Bluebunch Wheatgrass (*Agropyron spicata*, cultivar Secar)	3.0
Bluebunch Wheatgrass (*Agropyron spicata*, cultivar Whitmar)	3.0
Sherman Big Bluegrass (*Poa ampla*, cultivar Sherman)	4.0
Sand Dropseed (*Sporobolus cryptandrus*)	0.5
Basin Wildrye (*Elymus cinereus*, cultivar Magnar and/or Trailhead)	1.0
Thickspike Wheatgrass (*Agropyron dasystachyum*, cultivar Bannock)	2.0
Total:	13.5

Table B
Unalloted Public Land

Species	**Upland Mix (lbs/acre)**
Orchardgrass (*Dactylis glomerata*, cultivar Paiute)	2.0
Bluebunch Wheatgrass (*Agropyron spicata*, cultivar Whitmar and Secar)	2.0
Sherman Big Bluegrass (*Poa ampla*, cultivar Sherman)	2.0
Crested Wheatgrass (*Agropyron cristatum*, cultivar Hycrest)	2.0
Crested Wheatgrass (*Agropyron cristatum*, cultivar Fairway)	2.0
Thickspike Wheatgrass (*Agropyron dasystachyum*, cultivar Bannock)	1.0
Sand Dropseed (*Sporobolus cryptandrus*)	0.5
Western Wheatgrass (*Agropyron smithii*)	2.0
Small Burnett (*Sanguisorbia minor*)	4.0
Total:	17.5

2. Herbicide Application

Mechanical application of 2 lb/ac ai glyphosate formulation to 150 acres dominated by Medusahead Rye in accordance with the Lower John Day River Integrated Weed Management EA No. OR-054-3-63. Herbicide would be applied using a light weight, four wheel, all terrain vehicle (ATV). Application using a backpack sprayer would be done to within 20 feet of the spring area in T. 8 S., R. 19 E., Section 24, NW¼NW¼. Spraying would occur in the Spring of 2001 when the Medusahead is in the two to four leaf stage followed by a seeding in the fall.

3. Fences

Approximately 10.5 miles of existing fence would be reconstructed to protect the seeded areas from livestock and to reestablish a boundary fence between private land and the Spring Basin WSA along with keeping cattle from the WSA. About 2.0 miles of damaged fence is located on the boundary between private land and the WSA, this fence

would have a high priority for reconstruction in order to prevent livestock from accessing the burned and seeded WSA from the private land. About 1.5 miles of fence would only need partial reconstruction by replacing burned wooden corner and brace panels. The remaining 9.0 miles would need extensive reconstruction using the specifications for a four-strand fence with considerations for deer, elk and antelope movements. (Refer to the Map for fence locations). The top three wires would be barbed and the bottom wire smooth with a spacing of 18", 23", 28" and 40" respectively, from ground up. Posts would be steel, gray colored, and spaced one rod apart (16.5 feet) with a wire stay inserted halfway between each post. Corner posts and rock cribs would be built to Bureau specifications (See specification sheet at end).

3. Grazing

It is the policy of the BLM that lands burned by wildfire and areas seeded, should not be grazed by livestock for two consecutive growing seasons. The public land in the Spring Basin Allotment (2536) is currently not grazed and any future use is not planned for the next several years. There is 2,100 acres of burned public land between Eagle and Rhodes Canyon which is not leased for grazing. The 160 acres of the Amine Peak Allotment (2633), which is located in an isolated part of the allotment and only winter grazing occurs, would not be excluded from grazing.

B. Alternatives

1. Reconstruct the fences as stated in the Proposed Action, but do not seed or spray selected burn areas for noxious weeds.

2. No Action. Do not reconstruct the damaged fences, seed selected burn areas or spray for noxious weed control.

IV. EVALUATION AND ANALYSIS

A. Affected Environment

1. Water and Soil

The important aspects of post-fire hydrology are typically water retention and water quality. High intensity burns associated with heavy fuel loads result in hydrophobic soil conditions which may decrease infiltration rate and limit water holding capacity. The alteration of these parameters result in the inability of the burned area to absorb rainfall and overland flow may increase. Upland fuel loads were light and the subsequent burns low intensity, thus, fire induced hydrophobic characteristics are minimal.

From a soil and water standpoint, cover is imperative. Immediate revegetation of the early seral sites would 1) increase interception, 2) shorten the time for reintroduction of litter which will increase water holding capacity, and 3) reduce rain droplet kinetic energy prior to soil contact. In addition, upland revegetation is the most effective manner to reduce potential sediment recruitment.

The Draft Two Rivers RMP/EIS describes the soils in the burned area as a Simas-Gwin-Tub Association. These soils occur on steep bisected uplands (slopes 10 to 70 percent) and canyons, and the depth is shallow to deep. The slopes on the treatment areas are from 20 to 40 percent. The textures are clay, gravelly and very cobbly silty clay loam. The erosion potential from wind is slight, but from water it is moderate (2.5 to 10 tons/acre/year) to critical (over 15 tons/acre/year).

2. Vegetation

A SVIM inventory was conducted in 1981 on the public land in this planning area. The dominate vegetation type is

juniper big sagebrush which is distinguish by an over-story of junipers, Wyoming and basin big sagebrush, rabbitbrush with an understory of bluebunch wheatgrass, needle and thread grass, Thurber's needlegrass, Sandberg bluegrass, phlox, aster and some Idaho fescue on north slopes and basin wild rye on deeper soils,. The slopes tend to be in late seral condition which is dominated by native perennial species, but the drainage bottoms are in early seral condition and dominated by cheatgrass, medusahead rye, sixweek's fescue and scattered amounts of snakeweed, big sagebrush, rabbitbrush and western juniper. Dispersed plants of Sandberg's bluegrass, bluebunch wheatgrass, Thurber's needlegrass and sand dropseed are present in small amounts.

3. Wildlife

A variety of nongame mammals, reptiles, raptors, birds, and amphibians common to north-central Oregon can be found throughout the area. The burned area is also used year-long by game species including mule deer, chukar, and pronghorn antelope.

4. Special Status Species

a. Wildlife

Special status or sensitive wildlife species that are suspected to occur in the vicinity of the burned area based on recent records, regional data, and county specific documentation include: Western toad (*Bufo boreas)*, burrowing owl (*Athene cunicularia)*, Ferruginous hawk (*Buteo regalis)*, Swainson's hawk (*Buteo swainsoni)*, bald eagle (*Haliaeetus leucocephalus)*, loggerhead shrike (*Lanius ludovicianus)*, and Western bluebird (*Sialia mexicana)*.

Additional special status/sensitive wildlife species that may occur or have the potential to occur in the area include: spotted frog (*Rana pretiosa)*, tiger salamander (*Ambystoma tigrinum)*, long-billed curlew (*Numenius americanus)*, grasshopper sparrow (*Ammodramus savannarum)*, tricolored blackbird (*Agelaius tricolor)*, white-tailed jackrabbit (*Lepus townsendii)*, pallid bat (*Antrozous pallidus)*, and Townsend's big-eared bat (*Plecotus townsendii)*.

b. Botany

There are no known special status plants in the project area; however, the hedgehog cactus (*Pediocactus simpsonii* var. *robustior*) is present and listed on the Oregon Natural Heritage Program's List Four of species to be watched. In the Spring Basin WSA, a complete floristic inventory was conducted in 1986 and no special status plants were observed or suspected, based on the habitats in the area.

5. Fences

Approximately 10.5 miles of boundary fence with wood posts were completely destroyed or partially damaged by the fire. Many of the old barbed wires may have become brittle due to the high heat from the fire.

6. Grazing

The Spring Basin Allotment (2536) is the allotment most effected by the fire, although about 160 acres of the Amine Peak Allotment (2633) was also burned. The preeminent impact to both allotments is the loss of livestock control fences which would be needed to keep livestock from areas seeded and recovering naturally. Livestock would come mainly from adjacent private lands and the Amine Peak Allotment which is scheduled to be grazed this winter, 2000/2001.

The area burned in the Spring Basin Allotment is presently not being grazed and will not be grazed for the next few years because of constraints on the new owners as part of a resent acquisition agreement. The property was purchased by the Bonneville Power Administration and transferred to The Confederated Tribes of The Warm Springs. A condition of the transfer requires that The Tribes must show a beneficial effect to the resources before livestock grazing may occur, plus, The Tribes are in the beginning phases of drafting a management plan for the property and this may take a couple of years to complete.

In addition, there is 2,100 acres of the burn which is on public land not leased for grazing. The portion between Eagle and Rhodes Canyon is part of the Spring Basin WSA and separated from a section of private land by two miles of fence. The fence serves as both a control structure for livestock and a boundary for the WSA.

7. Archeological and Paleontological Resources

There are known archaeological and historical resources in the vicinity of the burn area, but none occur within the boundaries of the area proposed for seeding. There are also known paleontological localities in the vicinity of the burn area, but none in the area proposed for seeding.

8. Native American Uses

There are no known Native American religious sites or traditional cultural properties within the proposed seeding area. There is a known family root gathering area in close proximity, but it will not be effected.

9. Topography and Climate

The area climate consists of hot summer days, cool summer nights, and winters which are generally not severe. Average winter temperature in Condon is 33 degrees (F). Average summer temperature in Condon is 64 degrees (F). Total annual precipitation is 9 inches in Arlington and 14 inches at Condon. Thirty percent of the precipitation fall between April and September. The 6 hour -2 year event is 0.6" of rainfall and the 2 year-24 hour event is 1.2".

10. The Spring Basin Wilderness Study Area includes 5,982 acres of BLM land. These lands were studied under Section 603 of the Federal Land Policy and Management Act and alternatives for wilderness designation were analyzed in the Final Oregon Wilderness Environmental Impact Statement (EIS) filed in February of 1990. The EIS recommended that the entire WSA be designated as wilderness. The Wilderness Study Report to Congress (BLM, Vol. 1, October 1991, pg. 642) stated:

"The high wilderness values leading to the suitable recommendation include the colorful geologic features and rugged cliffs which give this WSA a unique beauty. Numerous vista points give the visitor a sweeping view of the John Day River valley and solitude is provided by the remote canyons and vegetative diversity. These highly scenic settings set the stage for the outstanding opportunities for recreation activities such as photography, hiking and nature study. Other wilderness values of the WSA include a unique combination of ecosystems (Palouse grassland province/wheatgrass, bluegrass and sagebrush steppe), several wildlife species, four plant species of special interest, and a prehistoric cultural site."

B. Environmental Impacts of the Proposed Action and Alternatives

1. Proposed Action:

a. <u>Seeding</u>

The seed mixture proposed for the 600 acres in the Spring Basin WSA contains only native species which are present on the adjacent mid to late seral sites. The seed mix for the 100 acres outside the WSA would have minimal impact to the adjacent areas in mid to late seral and would establish rapidly and be very competitive with the existing annual vegetation. The seeded species would compete with existing undesirable annuals and form a more heterogenous plant community. The aerial application method would have no impacts to the seeding area. In addition, restoring a more diverse plant community and lessening the impacts of noxious weeds and cheatgrass would improve visual resources.

The proposed seeding would be in compliance with the requirements for managing WSAs as directed by the IMP (pg. 38), which allows reseeding in WSAs under emergency conditions utilizing species native to the area and minimizing cross-country use of motorized equipment.

b. Fences

Fence reconstruction is not expected to have any significant environmental impacts. Some soil compaction and vegetation loss would occur along existing fence lines during the construction phase, but these would be short term, less then two years. The fences would be constructed using the wire and post spacings described in IV.A of this EA which would reduce impacts to wildlife. All proposed fences will function to control livestock and allow for the establishment of the seeded species and recovery of the existing native plants.

The proposed fencing would be in compliance with the requirements for managing WSAs as directed by the IMP (pg. 41), which allows livestock developments existing or under construction on October 21, 1976, to continued to be used and maintained.

c. Noxious Weed Control

The environmental impacts of *ai glyphosate* have been fully analyzed in EA No. OR-054-3-63.

The proposed weed control would be in compliance with the requirements for managing WSAs as directed by the IMP (pg. 39), which allows the control of noxious weeds when there is not effective alternative to maintain the natural ecological balances within a WSA or portion of a WSA. Use of a four wheel ATV would produce only minimal soil compaction and the tire tracks would be completely eliminated the following spring by growing vegetation.

d. Grazing

The public land burned in the Spring Basin Allotment and between Eagle and Rhodes Canyon, would be rested from livestock for two consecutive growing seasons which would allow for recovery of the native perennial species and establishment of the seeded ones. The actual duration of rest may extent well beyond two years since there is no immediate plan to graze either area. Impacts to the 160 acres of burned public land in the Amine Peak Allotment would be little to none. The area is isolated, very small and only winter grazing is scheduled. Observations have been made on the Prineville District that where winter grazing occurs in recently burned areas there is almost no utilization of plants in the burn. Provided there is sufficient forage available in other parts of the grazing unit. This would be the case in the Amine Peak Allotment with only 160 acres burned out a total of 15,700 acres.

2. Alternative to Construct Fences, but Not to Seed or Spray

a. Seeding

The areas identified as early seral condition are dominated by annual grasses (cheatgrass and medusahead rye). Without a interspersed natural seed source for desired native perennial grasses in these low seral sites, there would be increased dominance by cheatgrass and medusahead rye. Perpetuation of annual grasses that do not provide the soil stability of the native perennial grasses could cause increased hill slope erosion and sedimentation of stream channels.

A perpetuation of annual grasses would threaten the condition of the unique combination of ecosystems (Palouse grassland province/wheatgrass, bluegrass and sagebrush steppe) found in the WSA. This unique ecosystem is identified as a wilderness value for the Spring Basin WSA; a value which the BLM is directed to protect from degradation.

b. Fences

Reconstructing existing fences would keep livestock from grazing the burned area to allow natural recovery of native buchgrasses in the unseeded areas and allow establishment of the seeded species in the seeded areas. It would also restrict livestock trespass in the area of the Spring Basin WSA between Eagle and Rhodes Canyons which is not leased for grazing.

c. Noxious Weed Control

Taking no action would result in the degradation of wilderness values, specifically to the unique combination of ecosystems (Palouse grassland province/wheatgrass, bluegrass and sagebrush steppe) found in this WSA.

d. Grazing

The public land burned in the Spring Basin Allotment and between Eagle and Rhodes Canyon, would be rested from livestock for a minimum of two consecutive growing seasons to would allow for recovery of the native perennial species.

4. No Action Alternative

Impacts as identified in 2 (b) above would occur. In addition, without the reconstructed fences, livestock would have unrestricted access to the burned areas. This would result in all seral sites, from early to late, being grazed and causing excessive stress on recovering perennial grasses and doing nothing to reduce the dominance of cheatgrass and medusahead in the early seral sites.

Taking no action would result in the degradation of wilderness values, specifically to the unique combination of ecosystems (Palouse grassland province/wheatgrass, bluegrass and sagebrush steppe) found in this WSA.

V. MITIGATION AND STIPULATIONS

None.

VI. NO IMPACT ITEMS

The following items were considered, but will not be addressed because they will either not be affected or do not exist in the project areas.

1. ACEC's
6. Solid Waste

2. Air Quality
3. Water Quality
4. Hazardous Wastes
5. Prime or Unique Agricultural Lands
7. Wetland / Riparian
8. Wild and Scenic Rivers
9. Environmental Justice
10. Flood Plains

VII. RESIDUAL IMPACTS

Cumulative impacts of the proposed action would include vegetative improvements (establishment of non-invasive quality forage plants) and soil stability on public lands within the project areas. Other than those items already addressed in this document, no mitigating measures are required for implementation of the proposed action.

VIII. CONSULTATION/COORDINATION

Internal:

Lyle Andrews, Range Conservationist
Scott Cooke, Wildlife Biologist
Mike Crumrine, Natural Resource Specialist
Rick Demmer, Amphibians/Surface Protection Specialist
Ron Halverson, T&E Plants
Heidi Mottl, Recreation/Wilderness Specialist
Craig Obermiller, Range Conservationist
Brent Ralston, Fisheries Biologist
Anna Smith, Hydrologist
John Zancanella, Archeologist

External:

Terry Luther, The Warm Spring Confederated Tribes
Danny Greenfield, John Day Ranch Manager

/s/ Lyle Andrews	10/13/00	/s/ Scott Cooke	10/13/00
Responsible Official	Date	Environmental Coordinator	Date

IX. EMERGENCY FIRE REHABILITATION FORMS

EMERGENCY FIRE REHAB PROJECT SUMMARY
Two Horse Fire Complex N340

Fire Name	Two Horse Fire Complex
Fire Number	N340
Fire Control Date	July 28, 2000
Acres BLM Burned	8,400 acres
Start of Rehab (Mo/Yr)	October 2000
Completion of Rehab (Mo/Yr)	June 2002
Miles of New Fence (temporary electric fence)	0.0 miles
Miles of Fence Rebuilt	10.5 miles
No. of Soil/Watershed Structures	0
Acres of Revegetated	700 acres
Acres of Burned Area Protected for Natural Regeneration	7,700 acres
Total Acres Rehabilitated	8,400 acres
Estimated Funding Current Year (FY00)	5,000
Estimated Funding Second Year (FY01)	127,500
Estimated Funding Third Year (FY02)	30,000
TOTAL REHAB COSTS	162,500

/s/ Lyle Andrews 10/13/00
Responsible Official Date
Lower John Day Team

Review and Concurrence:

/s/ Scott Cooke for 10/13/00
Field Manager Date
Central Oregon Resource Area

EMERGENCY FIRE REHAB PROCUREMENT INFORMATION
Two Horse Fire Complex N340

Aerial Seeding

Approximate acreage to be seeded	700 acres
Approximate starting date (The 150 acres treated by herbicide for medusahead control would be seeded in the fall of 2001.)	February 1, 2001
Number of days to complete the work	3 days
Location of seed	Boise, ID, Seed Warehouse / Contract
Start of Rehab (Mo/Yr)	October 2000
Completion of Rehab (Mo/Yr)	June 2002
Miles of New Fence(temporary electric fence)	0
Miles of Fence Rebuilt	10.5
No. of Soil/Watershed Structures	0
Acres Reforestation	0
Acres of Revegetation	700
Acres of Burned Area Protected for Natural Regeneration	7,700
Total Acres Rehabilitated	8,400
Estimated Funding Current Year (FY00)	5,000
Estimated Funding Second Year (FY01)	127,500
Estimated Funding Third Year (FY02)	30,000
TOTAL REHAB COSTS	162,500

EMERGENCY FIRE REHAB
Modified Cost / Risk Analysis
Two Horse Fire Complex N340

Cost Analysis

Treatment	Cost
Revegetation (seeding)	76,521
Protective Fence (reconstruction)	63,000
Fence Maintenance (temporary electric fence)	0
Weed Control (herbicide application)	8,900
Soil / Watershed Structures	0
All Other Costs (admn., clearances, monitoring, etc.)	14,000
TOTAL	162,421

Risk Analysis

Probability of Rehabilitation Treatments Successfully Meeting EFR Objectives

Treatments	Units	NA	%
Revegetation (overall rating)	700		80
Drill Seeding (acres)		✔	
Aerial Seeding (acres)	700		80
Transplant Seedlings (acres)		✔	
Other: Broadcast seeding, ATV (acres)		✔	
Protective Fence to Exclude Livestock (miles)		✔	
Fence Repair to Exclude Livestock (miles)	10.5		100
Weed Control (acres)	150		60
Soil/Watershed Structures (overall rating)		✔	
Retention dams/structures (number)		✔	
Ripping, contour furrows, etc.		✔	
Matting, watershed cover, etc.		✔	
Other		✔	

Risk of Resource Value Loss or Damage

Identify the risk (high, medium, low, none or not applicable (NA)) of unacceptable impacts or loss of resources.

No Action - Treatments Not Implemented (check one)					
Resource Value	NA	None	Low	Mid	High
Unacceptable Loss of Topsoil				✔	
Weed Invasion					✔
Unacceptable Loss of Vegetation Diversity				✔	
Unacceptable Loss of Vegetation Structure				✔	
Unacceptable Disruption of Ecological Processes			✔		
Off-site Sediment Damage to Private Property		✔			
Off-site Threats to Human Life		✔			
Other -	✔				

Alternative 1					
Resource Value	NA	None	Low	Mid	High
Unacceptable Loss of Topsoil				✔	
Weed Invasion					✔
Unacceptable Loss of Vegetation Diversity				✔	
Unacceptable Loss of Vegetation Structure				✔	
Unacceptable Disruption of Ecological Processes			✔		
Off-site Sediment Damage to Private Property		✔			
Off-site Threats to Human Life		✔			
Other -	✔				

Proposed Action - Treatments Successfully Implemented (check one)					
Resource Value	NA	None	Low	Mid	High
Unacceptable Loss of Topsoil			✔		
Weed Invasion			✔		
Unacceptable Loss of Vegetation Diversity			✔		
Unacceptable Loss of Vegetation Structure			✔		
Unacceptable Disruption of Ecological Processes			✔		
Off-site Sediment Damage to Private Property		✔			
Off-site Threats to Human Life		✔			
Other -	✔				

SUMMARY

The costs of the project and probability of success of the proposed treatments are compared with the risks to resource values if: 1) no action is taken, and 2) the proposed action is successfully implemented. Alternatives may be included in this analysis to assist in the selection of the treatments that will cost effectively achieve the EFR objectives. Answer the following questions to determine which proposed EFR treatments should be selected and implemented.

1. Are the risks to natural resources and private property acceptable as a result of the fire if the following actions are taken?

Proposed Action Yes ✔ , No Rational for answer:
The risks of seeding using aircraft would be minimal to existing natural resources on public land and none to private lands. The major concern is the spread of medusahead which is present within and adjacent to the burned area. This action would help retard the expansion of medusahead while restoring vegetation diversity and structure to the burned area.

No Action Yes , No ✔ Rational for answer:
The lack of any weed control (seeding) would allow a rapid reestablishment and possible expansion of medusahead in the burned area which may accelerate the spread to adjacent federal and private lands. The reconstruction of damaged fences is needed to protect the burned area by excluding livestock from adjacent private lands and the Amine Peal Allotment. No action, may create greater future costs in trying to control the weeds and loss of wildlife habitat and livestock forage.

Alternative 1 Yes , No ✔ Rational for answer:
Reconstructing the damaged fences would protect the area from grazing for natural regeneration, however as stated in the No Action alternative, the lack of any weed control (seeding) would allow a rapid expansion of medusahead, to adjacent federal and private lands. No seeding may create greater future costs in trying to control the weeds and loss of wildlife habitat and livestock forage.

2. Is the probability of success of the proposed action, alternatives or no action acceptable given their costs?

Proposed Action Yes ✔ , No Rational for answer:
If the seed can be broadcast before the end of February there is a very good chance it would establish and retard the expansion of medusahead.

No Action Yes , No ✔ Rational for answer:
This alternative would save money now, but may cost more in the future for weed control and loss of wildlife habitat and livestock forage. Also, this may encourage a more rapid spread to adjacent public and private lands which would not make the BLM a "good" neighbor.

Alternative 1 Yes , No ✔ Rational for answer:
Same as the No Action Alternative.

3. Which approach will most cost effectively and successfully attain the EFR objectives and therefore is recommended for implementation from a Cost/Risk Analysis standpoint?

Proposed Action ✔ , Alternative , or No Action
Comments: As explained under numbers 1. and 2. above, if the seeding can be implemented before the end of February.

/s/ Lyle Andrews 10/13/00
Responsible Official Date
Lower John Day Team

Review and Concurrence:

/s/ Scott Cooke for 10/13/00
Field Manager Date
Central Oregon Resource Area

NATIVE/NON-NATIVE PLANT WORKSHEET
Two Horse Fire Complex N340

Proposed Native Plants in Seed Mixture

1. Are the native plants proposed for seeding adapted to the ecological sites in the burned area?
Yes ✔ , No
Rationale: All plants are known to grow within the precipitation zone and soil types that occur in the rehabilitation area.

2. Is seed or seedlings of native plants available in sufficient quantity for the proposed project?
Yes ✔ , No
Rationale: Limited availability of some native seed species have caused prices to rise somewhat as compared to earlier in the year. The quantity needed for this fire rehabilitation plan does not appear to be a concern at this time.

3. Is the cost and/or quality of the native seed reasonable given the project size and Land Use and Rehabilitation Plan objectives and the guidance in BLM Manual 1745?
Yes ✔ , No
Rationale: The quality of the some of the seed has already been determined to be satisfactory by the Interagency Seed Warehouse in Boise, ID. Those species that are not available from seed warehouse will be purchased from other vendors. Once seed is received from vendors and additional seed test will be performed to determine purity and germination. Prices of native species are modestly high, but reasonable.

4. Will the native plants establish and survive given the environmental conditions and the current or future competition from other species in the seed mix or from exotic plants?
Yes ✔ , No
Rationale: Depending on environmental conditions during the spring and early summer, native plants should become established. Future competition from exotic plants will occur, as with the case of areas of medusahead rye, but similar seedings have shown positive results.

5. Will the current or proposed land management (livestock, recreation use, wildlife populations, etc.) after the seeding establishment period maintain the seeded native plants in the seed mixture?
Yes ✔ , No
Rationale: Grazing in the Spring Basin Allotment where the seeding would occur is deferred for at least three years pending completion of a management plan by The Confederated Tribes of The Warm Springs. The 160 acres in the Amine Peak Allotment would not be seeded and about 100 acres of the seeding is located on public land which is not leased for grazing. Recreational use is minimal, although use from large ungulates, such as elk, may be moderate to high.

Proposed Non-native Plants in Seed Mixture

1. Is the use of non-native plants necessary to meet objectives, e.g., consistent with applicable land use/activity plans?
Yes ✔ , No
Rationale: The non-native species would only be used outside the Spring Basin WSA. A mixture of natives and non-natives can work well when competing with weed species. Many non-native species are more aggressive, establish better, and provide watershed stability and available forage for wildlife as good if not better than native species.

2. Will non-native plants meet the objective(s) for which they are planted without unacceptably diminishing diversity and disrupting ecological processes (nutrient cycling, water infiltration, energy flow, etc.) in the plant community?
Yes ✔ , No
Rationale: These species will actually increase the ecosystem processes mentioned and increase the diversity of the area.

3. Will non-native plants stay on the site they are seeded and not significantly displace or interbreed with native plants?
Yes ✔ , No
Rationale: Non-natives that will be planted have not been shown to displace are interbreed with native plants and should inhabit the site indefinitely.

Native Plants:
Sand Dropseed (*Sporobolus cryptandrus*)
Bluebunch Wheatgrass (*Agropyron spicata* var. Whitmar and Secar)
Thickspike Wheatgrass (*Agropyron dasystachyum*, cultivar Bannock)
Sherman Big Bluegrass (*Poa ampla*, cultivar Sherman)
Basin Wildrye (*Elymus cinereus*, cultivar Magnar and/or Trailhead)

Non-native Plants:
Crested Wheatgrass (*Agropyron cristatum* var. Hycrest and Fairway)
Orchardgrass (*Dactylis glomerata*, cultivar Paiute)
Small Burnett (*Sanguisorbia minor*)
Western Wheatgrass (*Agropyron smithii*)

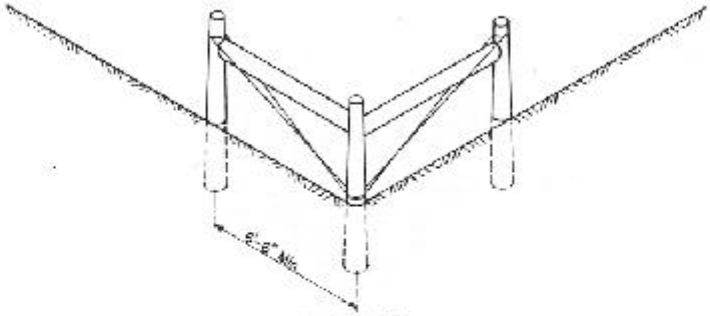

3-POST
CORNER PANEL

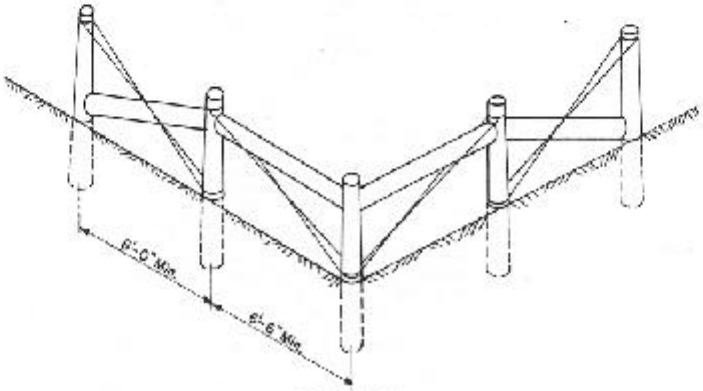

5-POST
CORNER PANEL
(TYPE I)

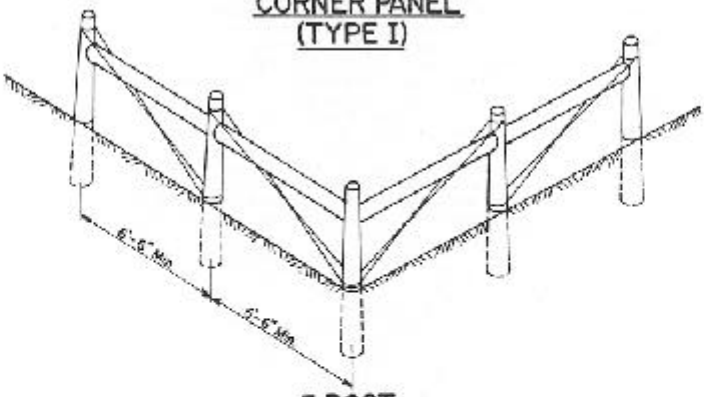

5-POST
CORNER PANEL
(TYPE II)

NOTES:

1. Refer to specifications for type of corner panels to use.
2. Number of wires, type of wire, and wire spacing same as for fence. Posts should be set 6 inches deeper than line posts.
3. Use spikes at junctures and mortise 1" deep at junctures of posts and braces.
4. Maximum spacing between posts shall be 8'-3" o.c.

ALWAYS THINK SAFETY

UNITED STATES DEPARTMENT OF THE INTERIOR
BUREAU OF LAND MANAGEMENT
DIVISION OF ENGINEERING SYSTEMS DENVER SERVICE CENTER

CORNER PANELS

DESIGNED BY OTHERS
REVIEWED
APPROVED

DRAWN J.D. Sedillo	SCALE NONE
DATE MAY 22, 1989	SHEET OF
DRAWING NO. 02833-9	

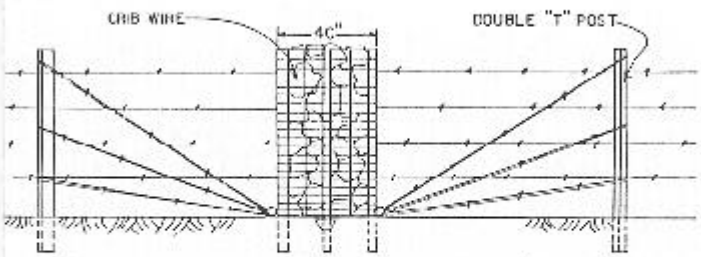

STANDARD CRIB & STRESS PANEL

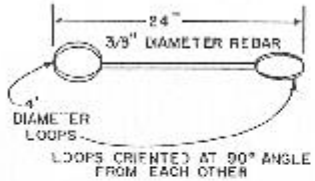

DETAIL "A"

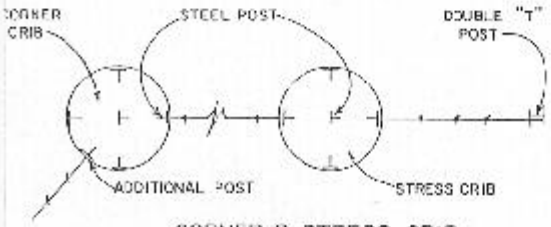

CORNER & STRESS CRIB

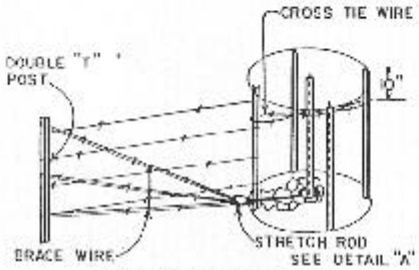

STRETCH ROD

SPECIFICATIONS

ROCK CRIBS (CORNER, END, AND STRESS) SHALL BE CONSTRUCTED AS PER SECTION 2833 OF THE SPECIFICATIONS, THE TYPICAL DRAWINGS, AND AS LISTED BELOW:

1. Rock crib base shall be level.
2. Center "T" post shall be driven at the center of corner or fence line.
3. Crib wire shall be overlapped twelve inches plus one square on each end used for securing mesh wire.
4. All wire terminations shall be double wrapped around "T" post and tied off by wrapping the incoming wire a minimum of four times.
5. Crib stretch rod shall be placed over center "T" post and lined to incoming fence line. Flat rock shall be placed under the stretch rod to keep it off the ground.
6. Crib rock shall be twelve inches maximum and three inches minimum diameter. Rock shall be hand placed with small rock filling voids.
7. Cross tie wire shall be a double loop run from the center post to the outside posts in the direction of fence.
8. No stretching of fence using the crib posts as an anchor will be allowed.
9. Horizontal panel wires (four) shall be installed hand tight only and shall not relieve any tension from brace wires. This work shall be performed last.

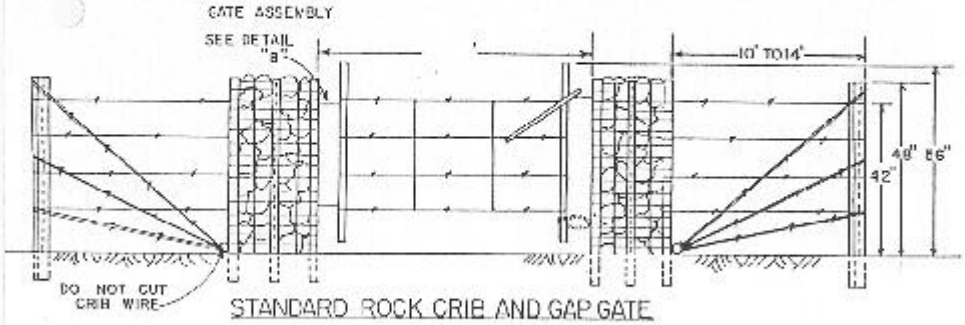

STANDARD ROCK CRIB AND GAP GATE

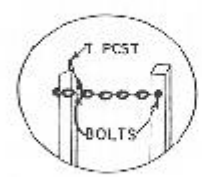

DETAIL "B"

70

U. S. DEPARTMENT OF THE INTERIOR
BUREAU OF LAND MANAGEMENT
VALE DISTRICT

STANDARD ROCK CRIB AND GAP GATE

DESIGNED MICHAEL G. MARSH	
REVIEWED [signature]	
APPROVED [signature]	
DRAWN MGM DHP	SCALE NONE
DATE 7-8-87	SHEET 1 OF 1
DRAWING NO. OR-03-9173.33-1	